BILL OF MATERIALS	ASSEMBLY POS. 2-R13	No. Required 4	POS. NO. 162

POS. NO.	QTYN.	Profile	LENGTH (mm)	Material	UNIT weight kg/m	weight (kg) QTY.	weight (kg) TOTAL	NOTE
162	1	IPE350-J	11977.4	S235JR	49.40	591.68	591.68	
176	1	IPE350-J	2000.0	S235JR	49.40	98.80	98.80	
214	1	PL8*71.8	109.3	S235JR	0.29	0.29	0.29	
238	1	PL20*180	720.0	S235JR	20.35	20.35	20.35	
240	1	PL20*180	510.0	S235JR	14.41	14.41	14.41	
413	2	PL10*80	150.0	S235JR	0.46	0.46	0.92	
414	1	PL10*81.6	175.0	S235JR	1.12	1.12	1.12	
490	10	PL5*75	75.0	S235JR	0.22	0.22	2.16	
491	10	PL5*130	180.0	S235JR	0.92	0.92	9.18	
501	10	PL5*100	100.0	S235JR	0.20	0.20	1.96	
a101	1	PL12*220	109.3	S235JR	2.27	2.27	2.27	
Total Weight						742.9	(kg)	

BOLT, NUT & WASHERS MATERIAL LIST				
EACH	REMARK		UNIT WEIGHT KG/1000	WEIGHT (KG)
5	M 24x50 BOLTS	GR8.8	273.0	1.37
5	M 24 NUTS	GR8.8	104.0	0.52
5	M 24 WASHERS	GR8.8	32.0	0.16
12	M 24x70 BOLTS	GR8.8	343.0	4.12
12	M 24 NUTS	GR8.8	104.0	1.25
12	M 24 WASHERS	GR8.8	32.0	0.38
2	M 27x100 BOLTS	GR8.8	627.3	1.25
2	M 27 NUTS	GR8.8	241.7	0.48
2	M 27 WASHERS	GR8.8	66.6	0.13
Total weight				9.66 (KG)

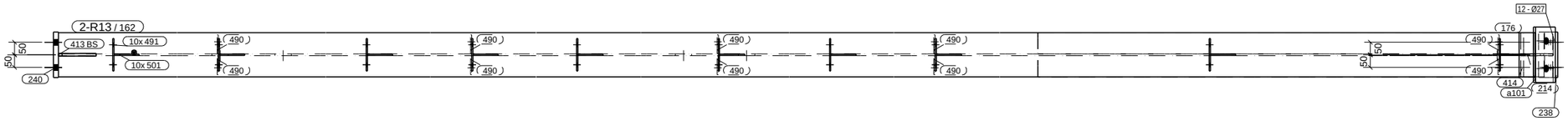

TOP VIEW

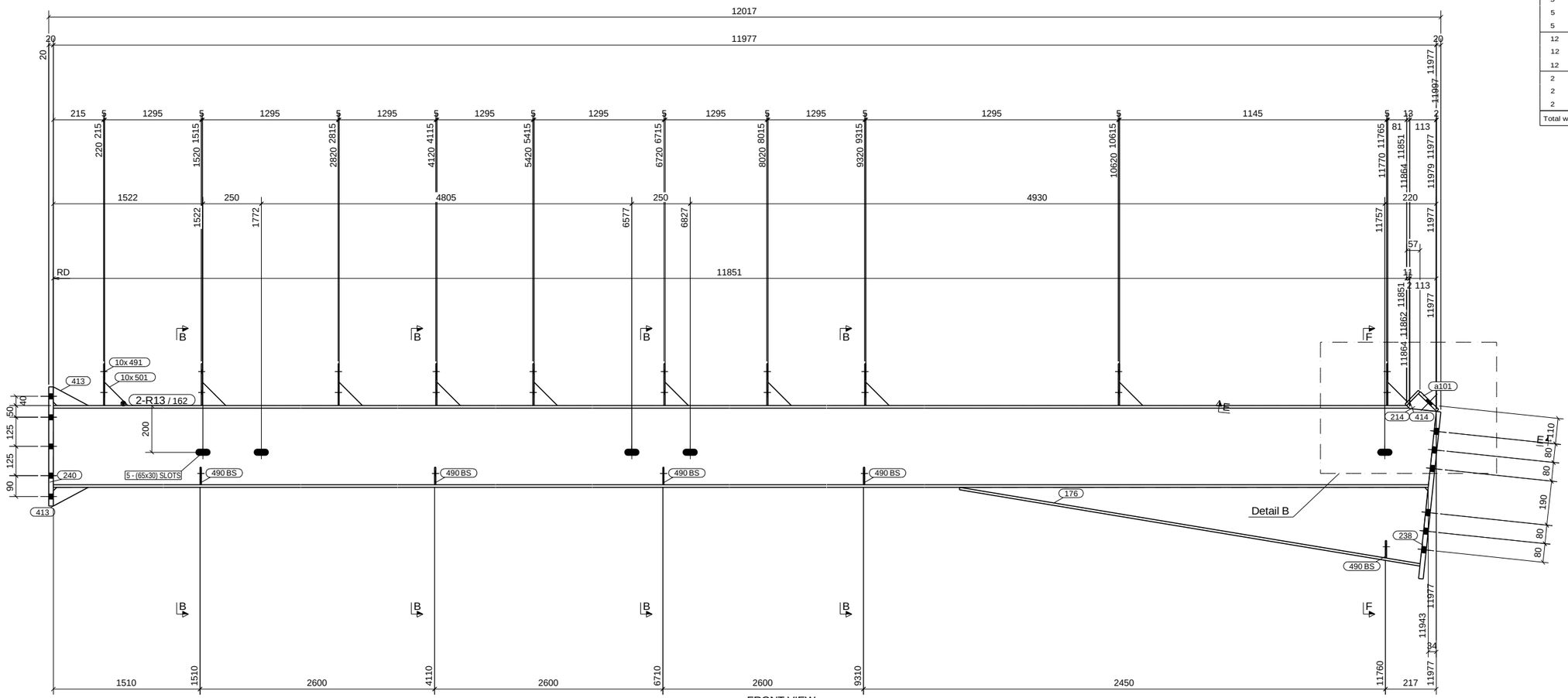

FRONT VIEW

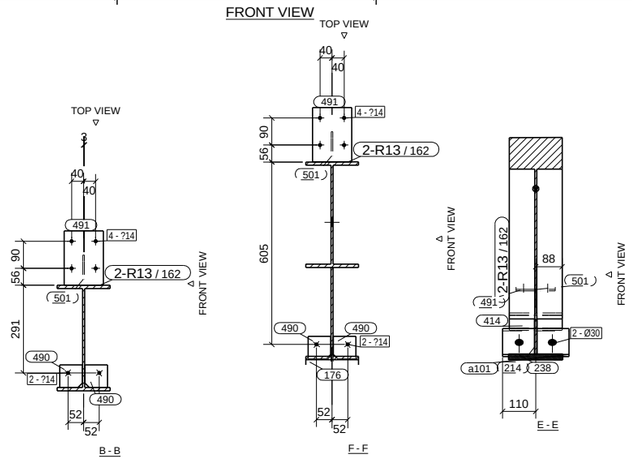

B - B

F - F

E - E

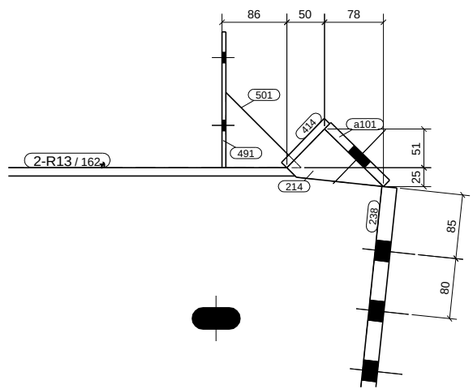

Detail - B

MARK: 2-R13
QTY: 4
DESC.: IPE350-J

GENERAL NOTES:

1. ALL HOLES ARE 22 mm DIA (UON).
2. ALL DIMENSIONS ARE IN MM (UON).
3. UNLESS OTHERWISE NOTED ALL FILLET WELD SIZE SHALL BE 7mm FILLET CONTINUOUS(UON)
4. RD DENOTES BASE LINE = 00

REV.	DATE	DESCRIPTION	DRN	CHK	DSN

PROJECT NAME:

MADAR GROUP JORDAN

CONTRACTOR:

- - - - - - - - - - - - - - - - - - -

DRAWING TITLE:

RAFTER
2-R13

CHECKED BY	A.A	SCALE	
DATE	A.A	SHEET NO.	

Tekla structures

/12/2026 * 15:33:21

PDF created with pdfFactory Pro trial version www.pdffactory.com